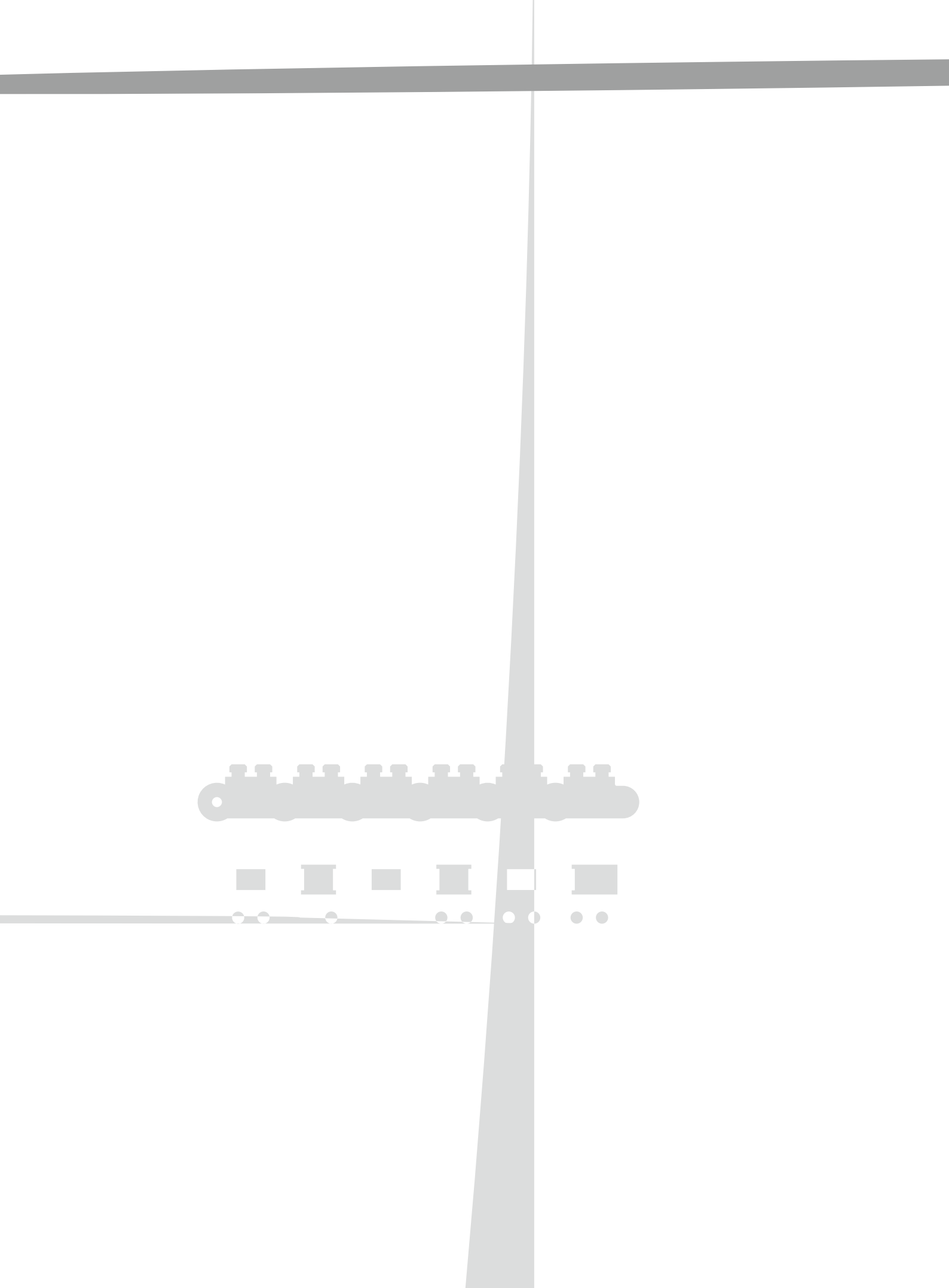

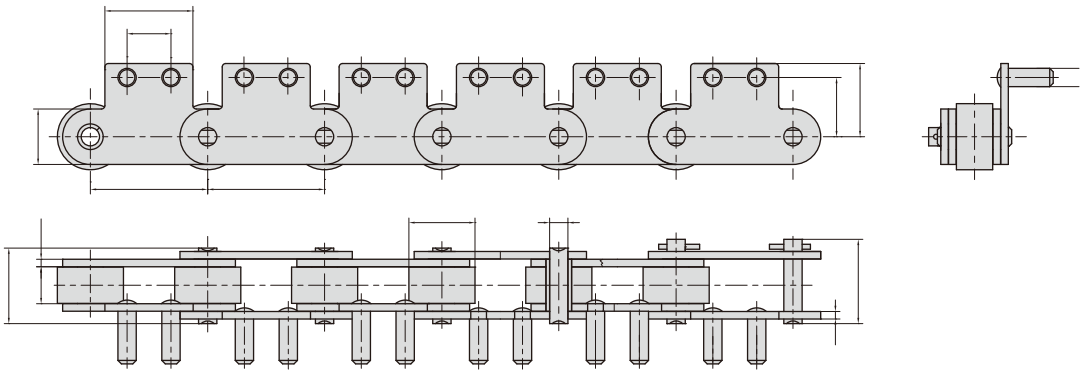

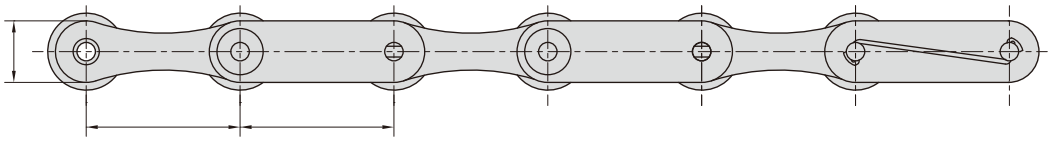

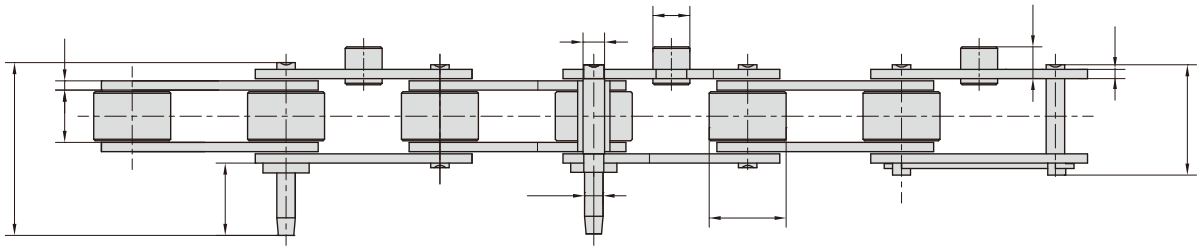

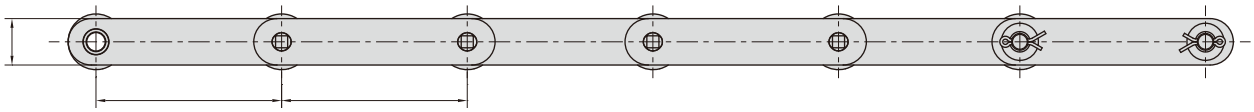

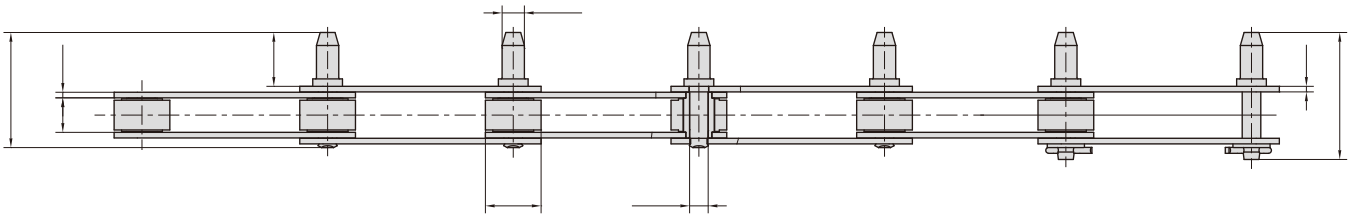

min 3.0

3,0